Example 3-1

The mass of the particle shown is 100 kg. It is moving along a rough horizontal surface for which the coefficient of kinetic friction $\mu_k = 0.2$ with an initial velocity $v_0 = 2\,m/s$ at the position $s = 0$. If the particle is subjected to a variable force $P = 40t$ N where t is the time in seconds, determine, after 15 seconds :

i- The velocity of the particle.

ii- The position s of the particle.

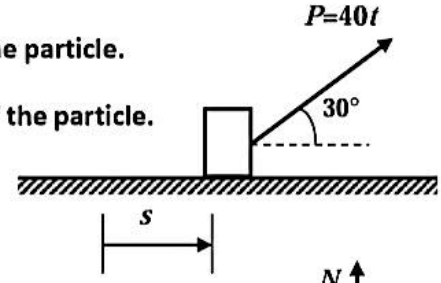

Solution

$\Sigma F_y = 0$

$N + 40t\sin 30° - mg = 0$

$N = 981 - 20t \qquad (1)$

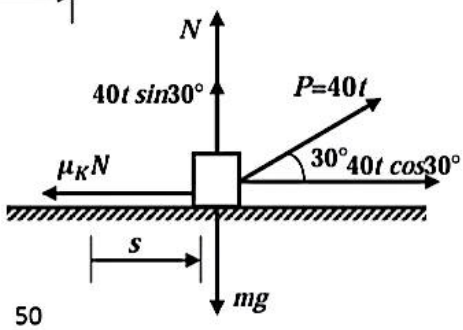

$ma = \sum F_x$

$= 40t\cos 30 - \mu_k N \qquad (2)$

$100a = 34.64t - 0.2(981 - 20t)$

$a = 0.3864t - 1.962$

$= \frac{dv}{dt}$

$v = v_0 + \int_0^t (0.3864t - 1.962)dt \qquad =$

$= 2 + 0.1932t^2 - 1.962t$

$s = s_0 + \int_0^t (2 + 0.1932t^2 - 1.962t)dt$

$= 0.0644t^3 - 0.981t^2 + 2t$

When $t = 15\ sec$:

$v = 16.04\,m/s$

$s = 26.625m$

CamScanner

Example 3-4

The masses of the two blocks A and B shown are 40 kg and 10 kg respectively, and the coefficient of kinetic friction between block B and the inclined plane is $\mu_k = 0.1$. If the blocks are released from rest, determine the acceleration and the velocity of block B after two seconds.

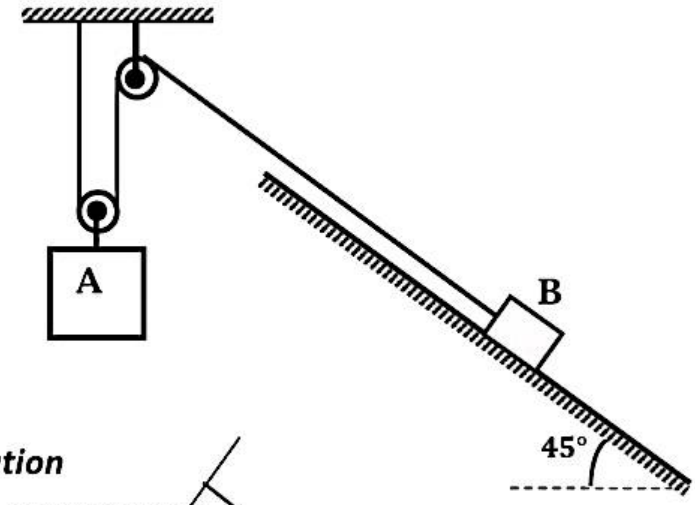

Solution

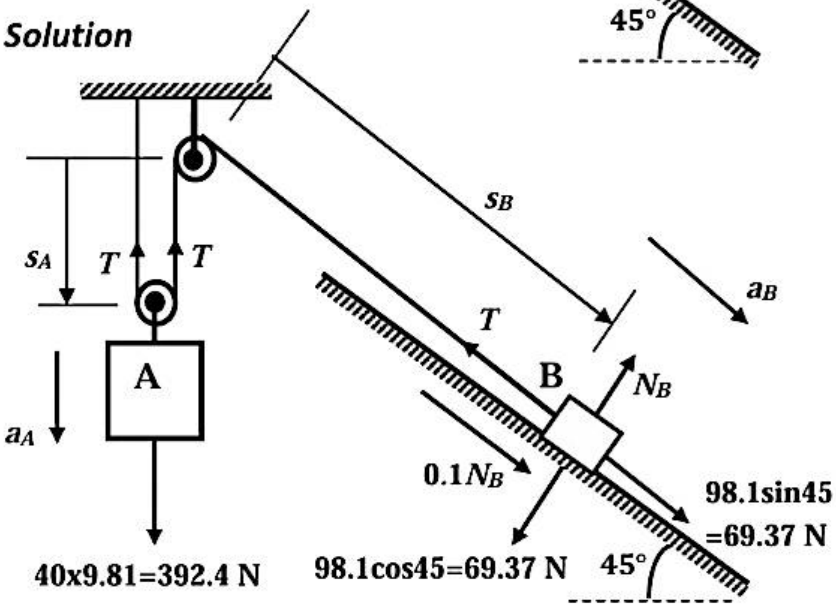

Kinematics:

$s_B + 2s_A = const. = L$

$\therefore a_A = -0.5a_B \qquad (1)$

Motion of block A:

$$m_A a_A = 392.4 - 2T$$

$$T = 196.2 - 20a_A \qquad (2)$$

Motion of block B:

$$\sum F_y = 0$$

$$N_B = 69.37 \ \text{N}$$

$$m_B a_B = 69.37 + 0.1N_B - T$$

$$10a_B = 69.37 + 6.937 - T \qquad (3)$$

Substituting from equations (1) and (2) into equation (3)

$$10a_B = 76.307 - [196.2 - 20(-0.5a_B)]$$

$$20a_B = -119.893$$

$$\therefore a_B = -6 \ \text{m/s}^2$$

$$v = v_o + at$$

$$\therefore v_B = 0 - 6 \times 2$$

$$= -12 \ m/s$$

CamScanner

Example 3-5

The masses of the two blocks A and B shown are 50 kg and 10 kg respectively, and the coefficient of kinetic friction between block B and the horizontal plane is $\mu_k = 0.25$. If the blocks are released from rest, determine the acceleration and the velocity of block A after 5 seconds.

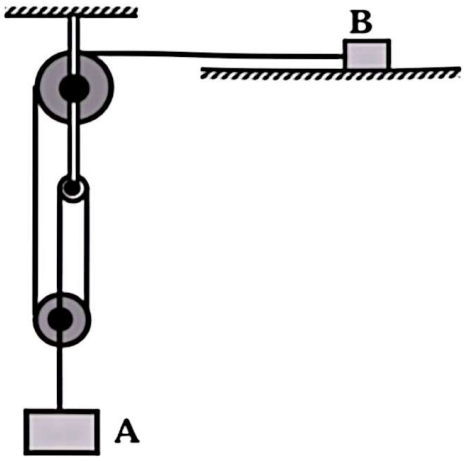

Solution

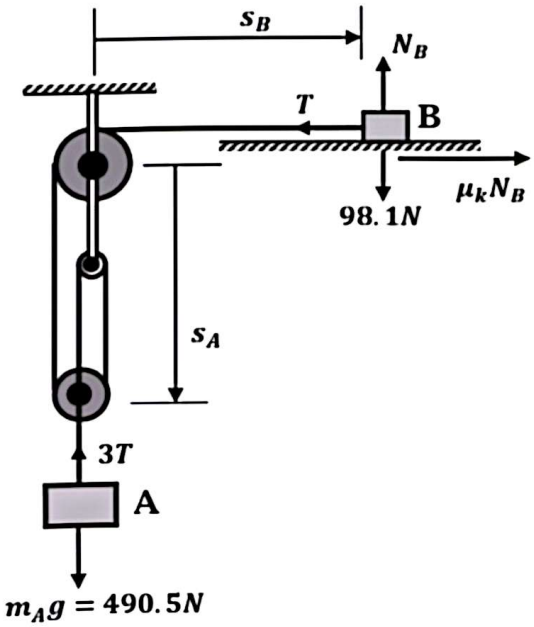

Kinematics:

$s_B + 3s_A = Const.$

$v_B + 3v_A = 0$

$\therefore v_B = -3v_A$

$\therefore a_B = -3a_A \qquad (1)$

<u>For block B:</u>

$\sum F_y = 0$

$N_B = 98.1\ N$

$m_B a_B = \mu_k N_B - T$

$T = 0.25x98.1 - 10a_B$

$T = 24.525 - 10a_B \qquad (2)$

CamScanner

For block A:

$$490.5 - 3T = m_A a_A$$

$$50a_A = 490.5 - 3T \qquad (3)$$

Substituting from equations (1) and (2) into (3) :

$$50a_A = 490.5 - 3[24.525 - 10(-3a_A)]$$

$$140a_A = 490.5 - 73.575$$

$$= 416.925$$

$$\therefore a_A = 2.98\ {}^{m}/_{s^2}$$

$$= const.$$

$$v = v_0 + at$$

$$\therefore v_A = 0 + 2.98x5$$

$$= 14.9\ {}^{m}/_{s}$$

CamScanner

Example 3-8

Block A has a mass of 20 kg and is moving along a rough surface having a coefficient of kinetic friction μ_k=0.2. Block B has a mass 100 kg is attached to block A using the cable and pulley system shown. If the system is released from rest Determine:

a. **The tension in the cable.**
b. **The acceleration of block A.**
c. **The velocity of block B after 5 sec.**

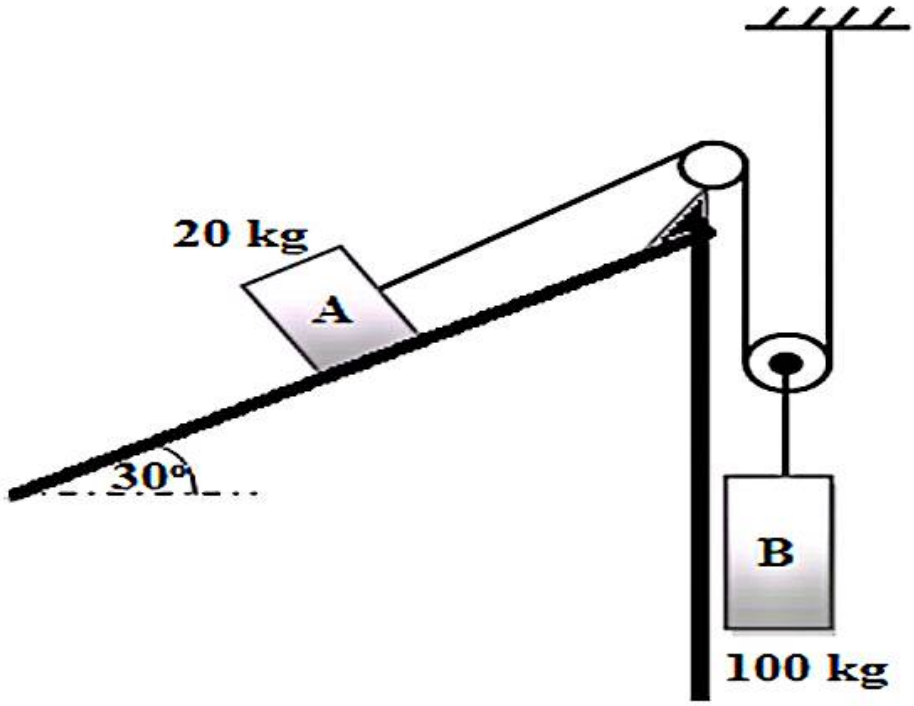

CamScanner

Solution

$a)$ Block A

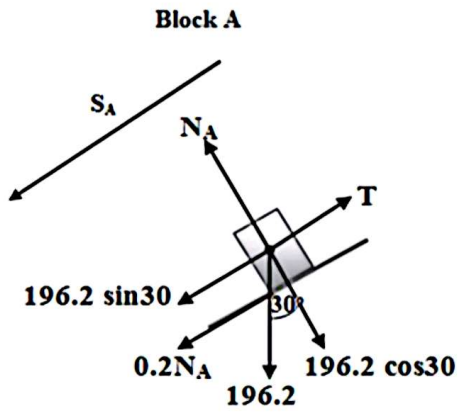

$$\sum F_x = m_A a_A$$

$$196.2\,sin\,30 + 0.2N_A - T = 20a_A$$

$$\sum F_y = 0$$

$$\underline{N_A = 196.91 \rightleftarrows N}$$

$$98.1 + 33.982 - T = 20a_A$$
$$132.0828 - T = 20a_A \rightarrow (1)$$

$b)$ Block B

$$\sum F_y = m_B a_B$$

$$981 - 2T = 100a_B \rightarrow (2)$$

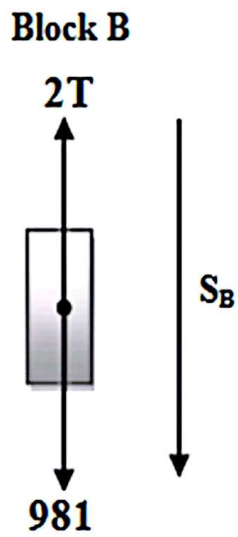

$$l = s_A + 2s_B$$

$$0 = v_A + 2v_B$$

$$a_A = -2a_B \rightarrow (3)$$
$$sub.(3)in(1)$$

$$T - 132.0828 = 40a_B$$

$$\underline{a_B = 3.982m/sec^2}$$

$$\underline{a_A = -7.9648m/sec^2}$$

$$\underline{T = 291.4N}$$

$$v_B = v_{oB} + a_B t$$

CamScanner

Problems

3-1 The particle shown having a mass of 20 kg mass is moving along a rough horizontal surface for which the coefficient of kinetic friction $\mu_k = 0.4$. If the particle is subjected to the two constant forces, determine the velocity of the particle after 4 seconds starting from rest.

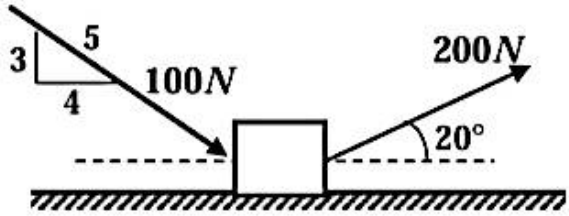

3-2 The particle shown is of 40 kg mass and is moving along a rough inclined surface for which the coefficient of kinetic friction $\mu_k = 0.25$ with an initial velocity $v_0 = 2\ m/s$ at the position $= 0$. If the particle is subjected to a variable force $P = 300t^2$ N where t is the time in seconds, determine the velocity and the position of the particle when t =10 sec.

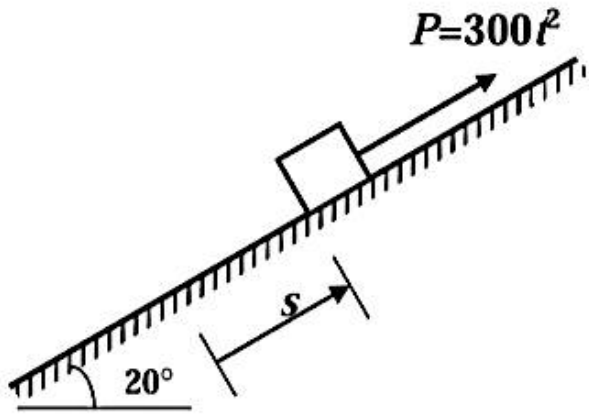

CamScanner

3-4 The masses of the two blocks A and B shown in the Figure are $10\ \mathrm{kg}$ and $80\ \mathrm{kg}$ respectively, and the coefficient of kinetic friction between block B and inclined plane is $\mu_k = 0.1$ If the blocks are released from rest, determine the acceleration and the velocity of block A after two seconds.

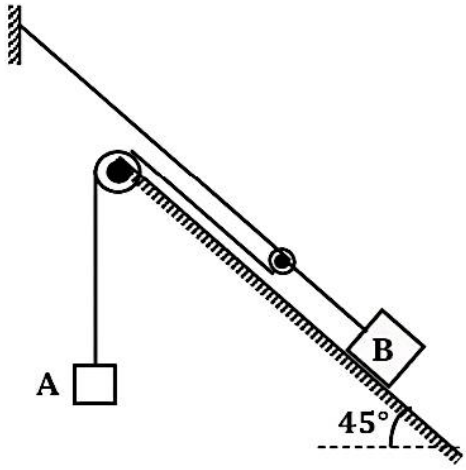

3-5 The masses of the two blocks A and B shown are $100\ \mathrm{kg}$ and $10\ \mathrm{kg}$ respectively, and the coefficient of kinetic friction between block B and the inclined plane is $\mu_k = 0.2$ If the blocks are released from rest, determine the acceleration and the velocity of block A after 2 seconds. $\tan\theta = 0.75$.

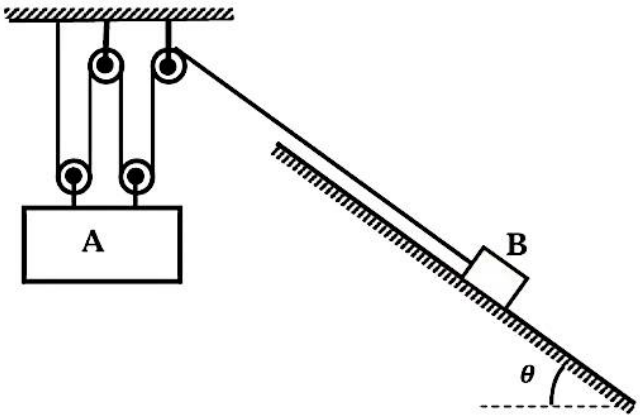

3-6 The masses of the two blocks A and B shown are $40\ \mathrm{kg}$ and $20\ \mathrm{kg}$ respectively, and the coefficient of kinetic friction between block B and the inclined plane is $\mu_k = 0.1$. If the blocks are released from rest, determine the acceleration and the velocity of block B after two seconds.

CamScanner

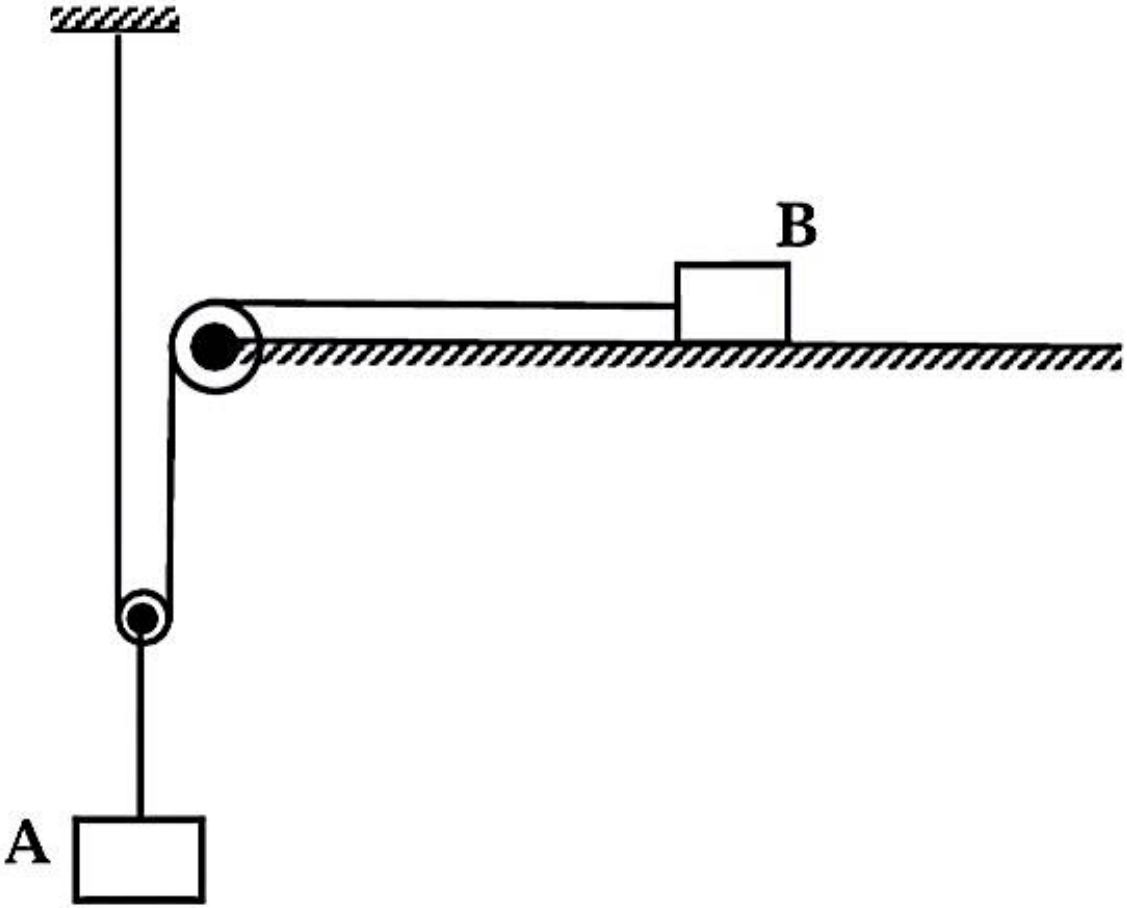

CamScanner

3-6 The masses of the two blocks A and B shown are $40\ \mathrm{kg}$ and $20\ \mathrm{kg}$ respectively, and the coefficient of kinetic friction between block B and the inclined plane is $\mu_k = 0.1$. If the blocks are released from rest, determine the acceleration and the velocity of block B after two seconds.

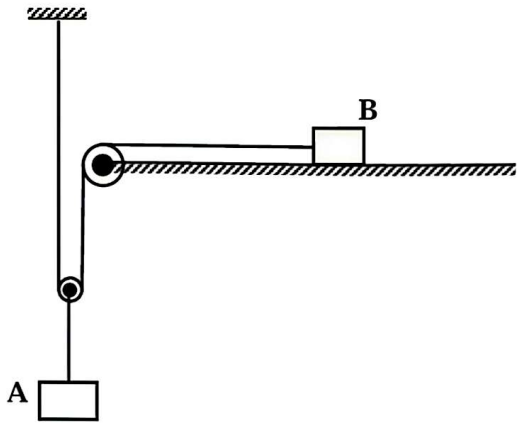

24

3-7 A vertical force of 100 *KN* is acting on a 1000 *kg* mass particle. Determine the height of the particle after 10seconds if it starts from rest.

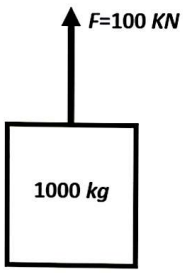

3-8 For the pulley arrangement shown, determine the acceleration of

Edit PDF Comment Highlight Draw Fill & Sign More tools

CamScanner

3-14 The elevator E shown has a mass of 800 kg and the counterweigh A has a mass of 200 kg.

If the motor M is drawing the cable at an acceleration of 7 m/s², determine the tension in the cable.

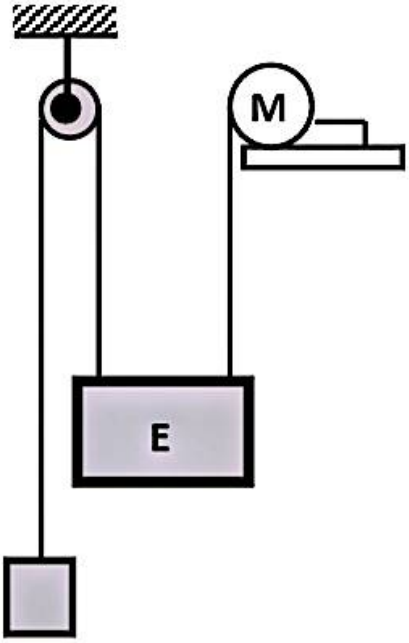

3-15 The mass of the particle shown is 20 *kg*. The speed of the particle is reduced from 50 *m/s* at A to 10 *m/s* at B. If the distance between A and B is 5 *m*, determine the coefficient of kinetic friction between the particle and the rough surface.

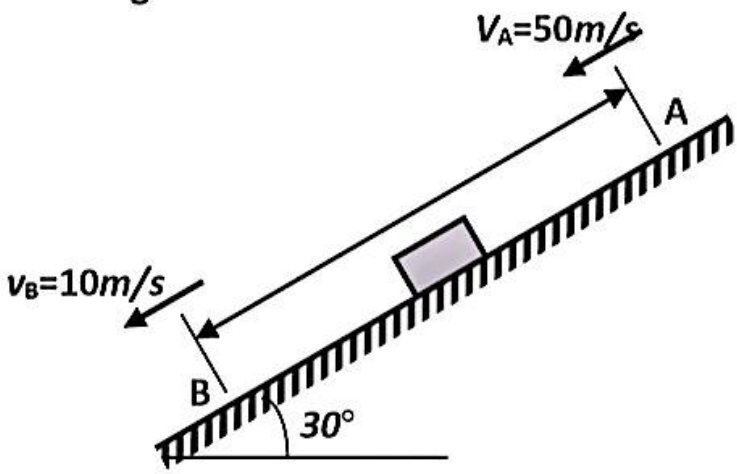

CamScanner